Toggle Clamp

A Cinch to Clinch

- Woodcraft Magazine
- Shop Jigs & Fixtures

Wolf Moehrle Posted on Aug 11, 2017 7:38 AM
Comments (0)

Our simple, inexpensive toggle clamps hold your work in a tight grip. Make several at once & apply them liberally to improve your shop-made jigs.

Recently I felt I could use some of those metal toggle clamps, but unlike me, they’re not cheap. So I came up with this unique design for a clamp that is functional and is also a fun little project. I made these out of beech, but they can be made from any hardwood.

Getting started

I started by gluing up stock for the base parts – enough to make about a dozen clamps. I machined it to finished height and width, then marked off each base and the holes for the bolts.

After drilling all the holes for the bolts, I set up the dado blade to cut the channel down the middle. This is done by first cutting one pass, then turning the part around and making a second cut. Doing it this way ensures that the channel is at dead center (Fig. 1).

I cut the individual base parts with a crosscut jig (Fig. 2) and drilled holes for the mounting screws (Fig. 3). This is done with a fence and two stops on the drill press, so it goes very quickly.

To cut the downward angle, I marked it on one of the parts with a pencil, lined it up to the slot in the crosscut jig and stuck a chunk of wood to the jig with double-sided tape. Then I just ran all the parts though (Fig. 4). The corners are rounded with a sanding disk (Fig. 5).

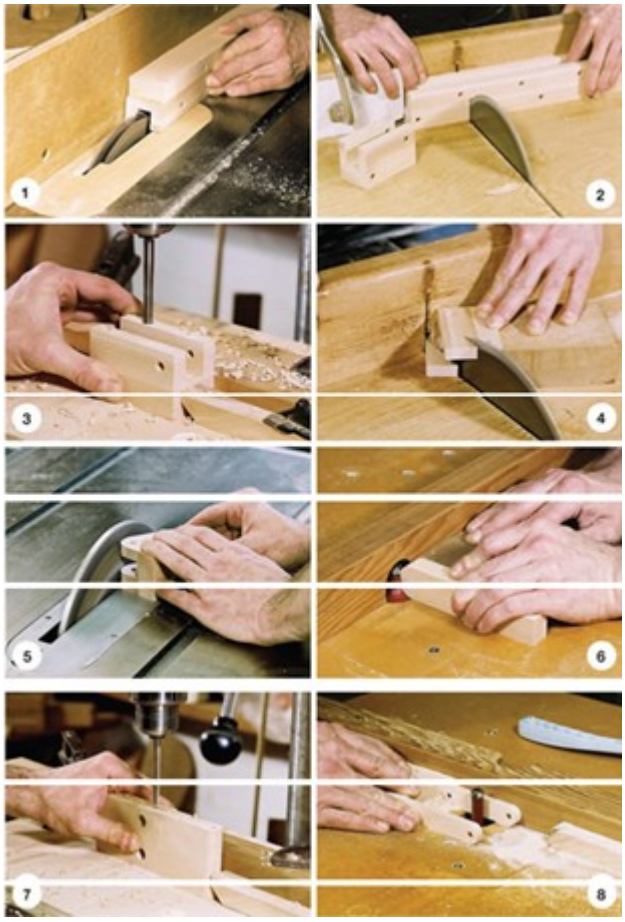

Next I machined material for all the other parts and cut them to finished sizes, all except the “press” part (see below). All of the rounded ends are simply done with two passes over a roundover bit (Fig. 6).

Making the handle & press For the handle, the bolt holes are again drilled with a fence and two stops (Fig. 7). These holes only need to go in about 1/2" since the material in the center will be removed. Before I remove the center material, I clean out the corners with a 1/2" hole. The material is then cut out with the bandsaw, leaving just a little bit of waste on the sides.

This is cleaned up using a straight cutter on the router table with a fence and a stop. The part is guided along the fence to the stop, and the space between the cutter and the fence will give me my finished thickness (Fig. 8). Then the upper part of the handle is cut out on the bandsaw and cleaned up with a simple jig on the router. I also rounded over the upper part with a 1/4" roundover bit.

The part that will become the press is made two at a time so it is easier to handle while machining. Each part is separated after most of the machining is done, so it should be twice the length, plus enough material to allow for

the saw cut that will separate the two parts. The holes are then drilled, the ends are rounded over and then the opening is cut out on the table saw with a dado blade.

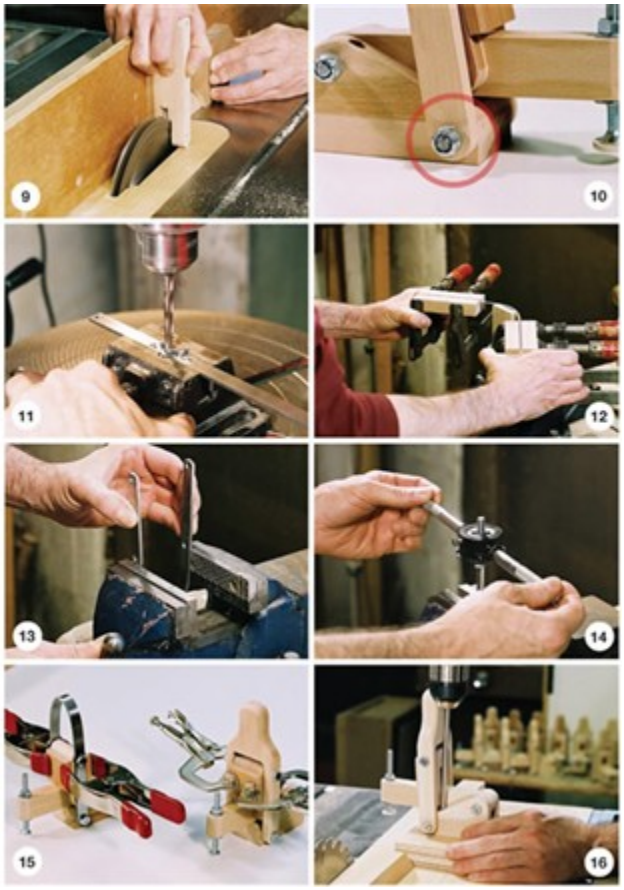

This process is similar to cutting the channel in the base part – by rotating it and making two cuts I can get it dead center. I use a block to push the part through while holding it against the fence. The push block is pulled back once the part has gone through the blade, and for safety I always try to keep a few fingers over the top of the fence to ensure my hand cannot accidentally go into the blade (Fig. 9). The parts are then separated on the crosscut jig, trimmed to finished length, and the ends rounded over on the router just like the other parts.

Editor's Note: While it is the author's prerogative to make the cut described above, we cannot, in good faith, suggest that others attempt it. The use of a tenoning jig or other shop-built device that will keep your fingers safely away from the blade, and your stock secure, is highly recommended.

Optional metal handle

Since this clamp is made of wood, it does have one weakness – the link at the bottom of the handle (Fig. 10). For light-duty use, it’s not a problem, but if a lot of pressure were to be applied, this link might fail. For this reason, the lower part of the handle would either have to be reinforced with steel, or the entire handle could be made from a piece of 1/8" flat stock as I have done. This is a good alternative if high pressure clamping is planned.

Drill the holes using a drill press vise with the same spacing as the wooden part (Fig. 11). When working with steel, I slow the machine down to the slowest speed and use oil as a cutting fluid. Before bending the part, clamp scrap pieces of hardwood over the lower 4" to prevent the metal from bending at the holes (Fig. 12). Finish the bending process in the vise, and once again make sure the holes are outside of the jaws (Fig. 13).

I don’t like to have a threaded rod running inside a wooden hole, so I buy bolts that are slightly longer than needed and simply extend the thread with a die (Fig. 14). This way the thread starts exactly where the bolt exits the wood. The excess length is then cut off with a hacksaw and the cut end chamfered on a grinding wheel.

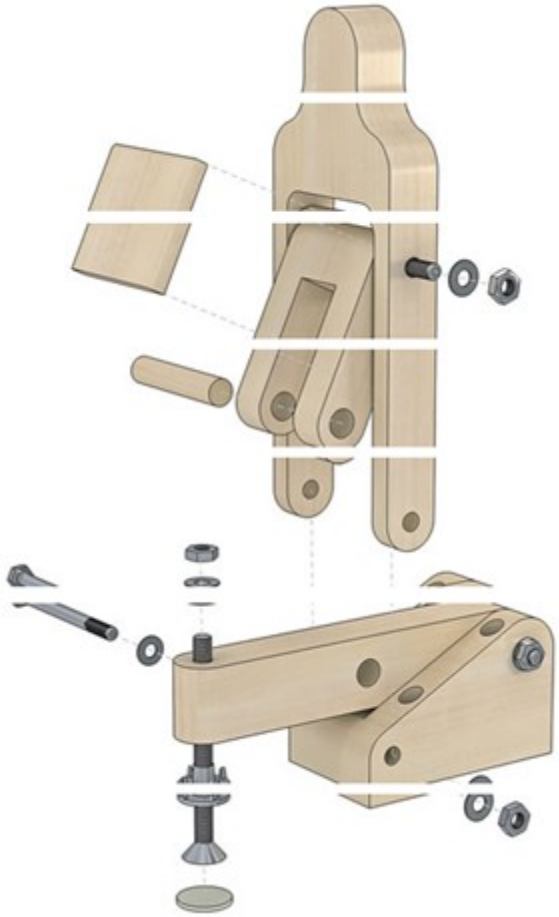

Assembly

Before I assemble the parts, I like to break all the corners with sandpaper to give the finished clamp a nice, clean look.

Press the T-nut in place with the jaws of a vise. Slip the press over the arm (with the T-nut pointing down) and push the dowel into the hole. Center the dowel and secure it with the small retaining screw.

Put the arm into the base and secure it with the shorter bolt. Tighten the bolt up so the nut meets the wood, but the bolt can still turn in the hole. Attach the handle by inserting the bolts and washers through the press and base, and tighten up the nuts. The last thing you'll need to do is glue the stop block to the press. Just line up the handle so it is straight up and down with the press lined up and running parallel inside it. Position the stop block so it is in contact with the arm and glue it into place (Fig. 15).

I glued small rubber pads to the ends of the fl at-head machine screws. The clamp is now ready and can be used on a variety of jigs. The hold down screws can easily be driven with a long driver (Fig. 16).

- All holes are ¼" except dowel holes which are ⅜".
- Dowel retainer screw hole is 3/32" (countersunk).
- Hold-down screw holes are 5/16" with 5/32" pilots.

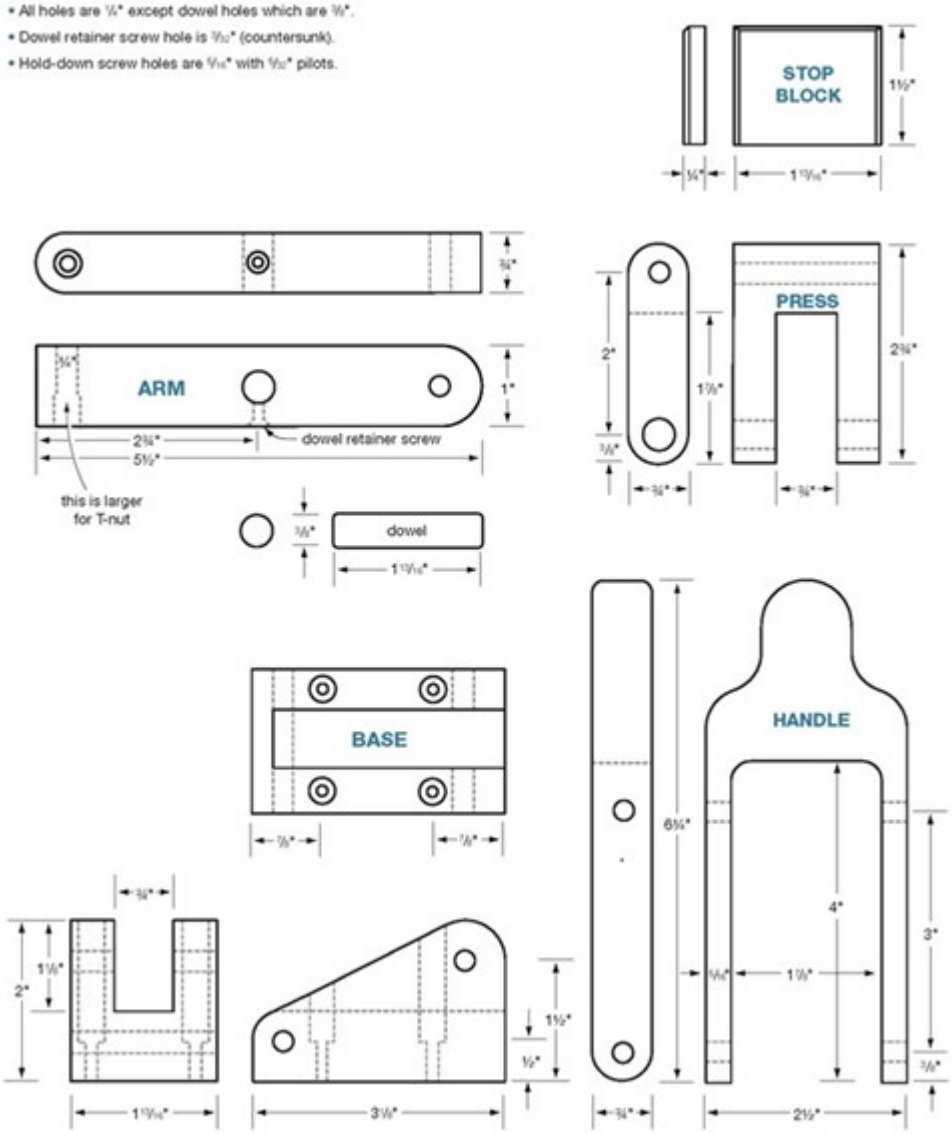

CUT LIST

Base	2"	x	1 13/16"	x	3⅛"
Arm	¾"	x	1"	x	5½"
Handle	¾"	x	2½"	x	6½"
Press	¾"	x	1 13/16"	x	2¾"
Stop block	¼"	x	1½"	x	1 13/16"
Dowel	⅜"	x	1 13/16"		
Metal handle*	⅛"	x	½"	x	12½"

*mild steel flat stock, could also be ⅝" wide

Wolf Moehrle

Wolf Moehrle is an award-winning craftsman and custom furniture designer from Neustadt, Ontario. He has taught cabinet making at the same high school where he took woodshop. He is also a musician, and sometimes performs on weekends.